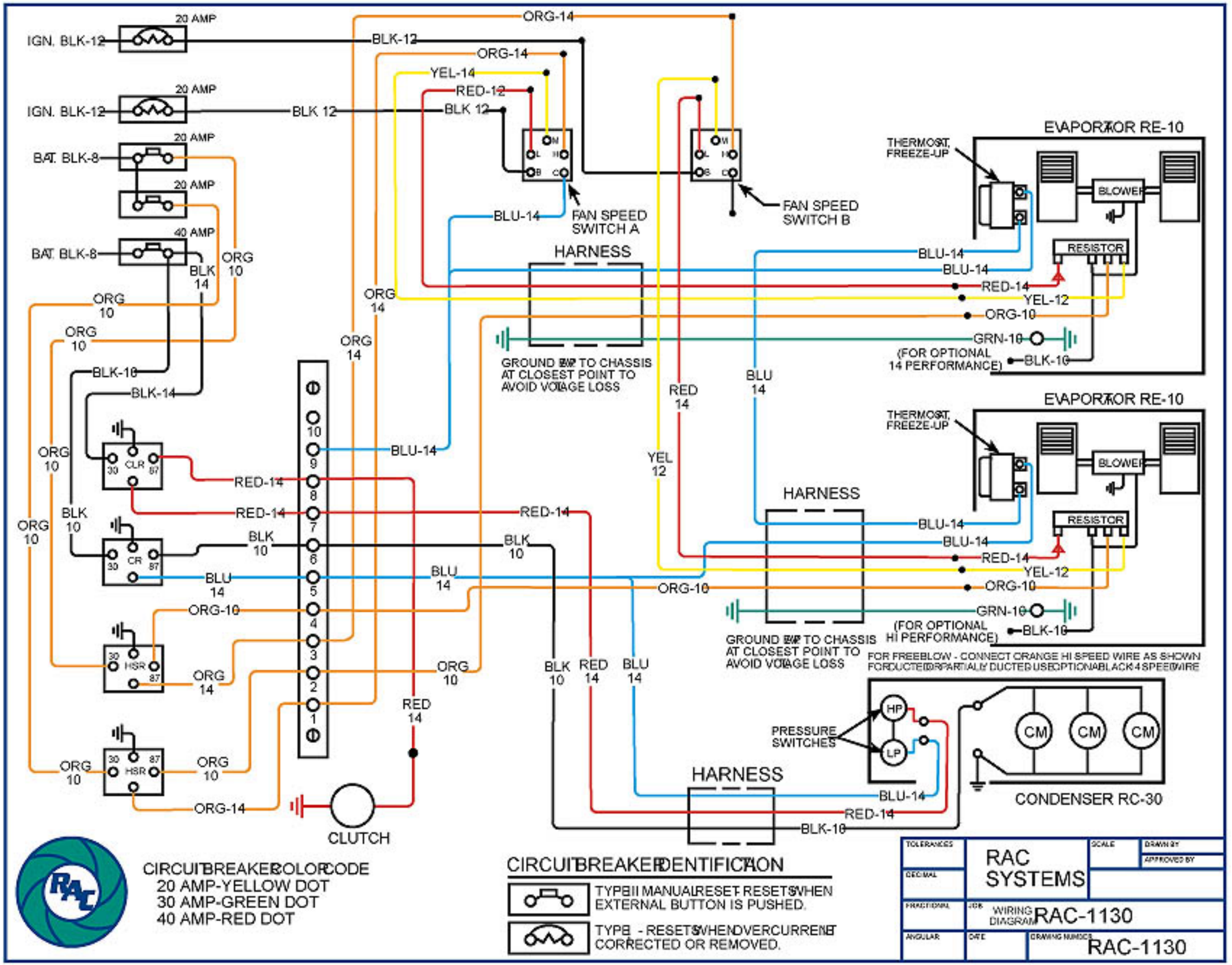
IGN. BLK-12
20 AMP
BLK-12
ORG-14
YEL-14
RED-12
BLK 12
BAT. BLK-8
40 AMP
BLK 14
ORG 10
ORG 14
BLU-14
FAN SPEED SWITCH A
FAN SPEED SWITCH B
HARNESS
GROUND STRAP TO CHASSIS AT CLOSEST POINT TO AVOID VOLTAGE LOSS
EVAPORATOR RE-10
THERMOSTAT, FREEZE-UP
BLOWER
RESISTOR
RED-14
YEL-12
ORG-10
GRN-10
BLK-10
(FOR OPTIONAL HI PERFORMANCE)
BLK-14
CLR
CR
HSR
RED 14
BLU 14
YEL 12
BLK 10
CLUTCH
PRESSURE SWITCHES
HP
LP
CM
CONDENSER RC-30
FOR FREEBLOW - CONNECT ORANGE HI SPEED WIRE AS SHOWN FOR DUCTED OR PARTIALLY DUCTED USE OPTIONAL BLACK 4 SPEED WIRE
CIRCUIT BREAKER COLOR CODE
20 AMP-YELLOW DOT
30 AMP-GREEN DOT
40 AMP-RED DOT
CIRCUIT BREAKER IDENTIFICATION
TYPE II MANUAL RESET - RESETS WHEN EXTERNAL BUTTON IS PUSHED.
TYPE I - RESETS WHEN OVERCURRENT CORRECTED OR REMOVED.
RAC SYSTEMS
WIRING DIAGRAM
RAC-1130
DRAWING NUMBER
RAC-1130