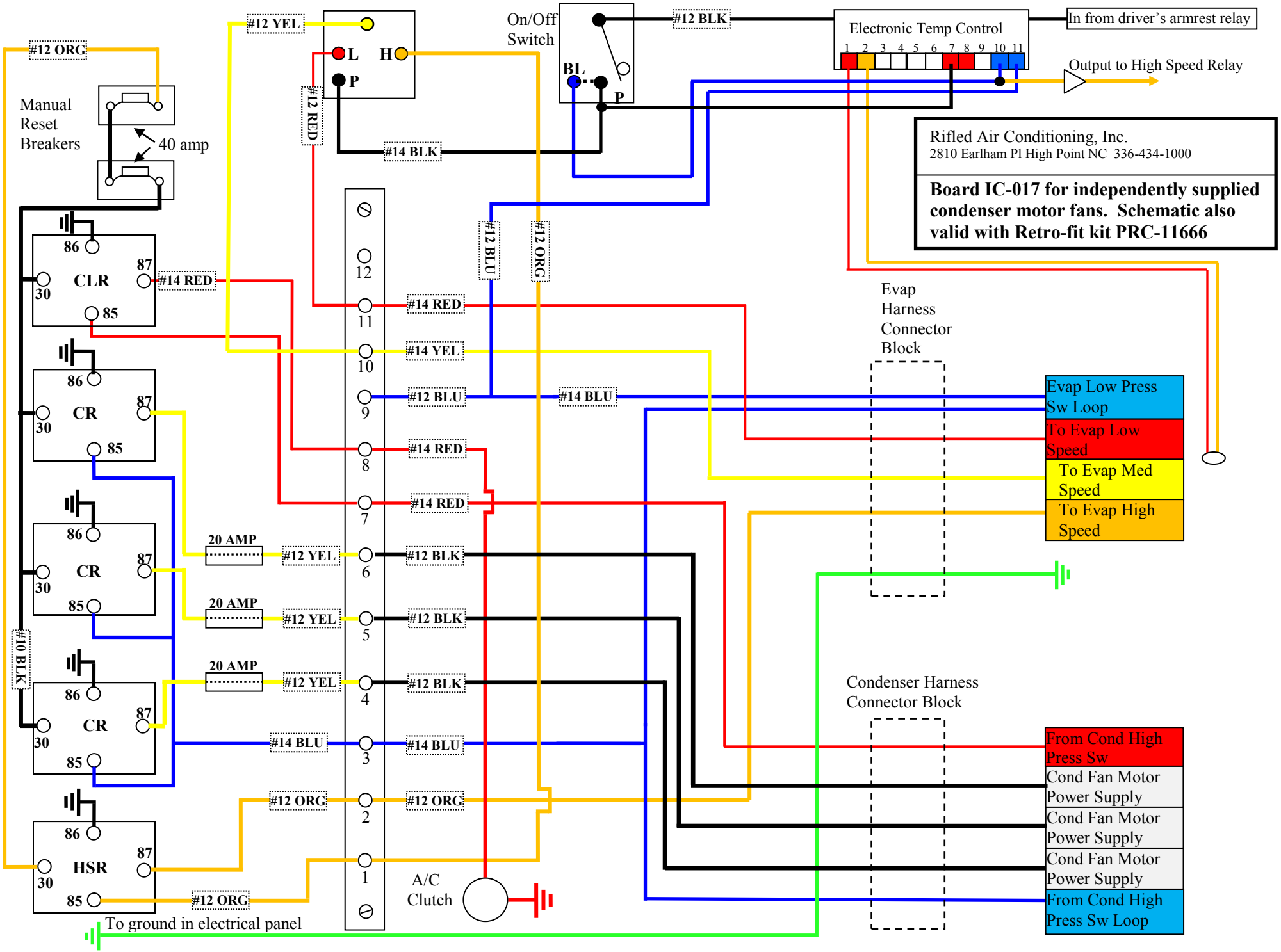
Rifled Air Conditioning, Inc.
2810 Earlham Pl High Point NC 336-434-1000
Board IC-017 for independently supplied condenser motor fans. Schematic also valid with Retro-fit kit PRC-11666
Electronic Temp Control
1 2 3 4 5 6 7 8 9 10 11
In from driver's armrest relay
Output to High Speed Relay
On/Off Switch
BL
P
#12 BLK
#12 YEL
#12 ORG
#12 RED
#14 BLK
L
H
P
Manual Reset Breakers
40 amp
CLR
CR
CR
CR
HSR
86
87
30
85
#14 RED
#14 YEL
#12 BLU
#14 BLU
#12 BLU
#12 ORG
#10 BLK
20 AMP
#12 YEL
#12 BLK
#14 BLU
#12 ORG
12
11
10
9
8
7
6
5
4
3
2
1
Evap Harness Connector Block
Evap Low Press Sw Loop
To Evap Low Speed
To Evap Med Speed
To Evap High Speed
Condenser Harness Connector Block
From Cond High Press Sw
Cond Fan Motor Power Supply
Cond Fan Motor Power Supply
Cond Fan Motor Power Supply
From Cond High Press Sw Loop
A/C Clutch
To ground in electrical panel